Bowers & Wilkins

607 S3

SIDE (WITH GRILLE)

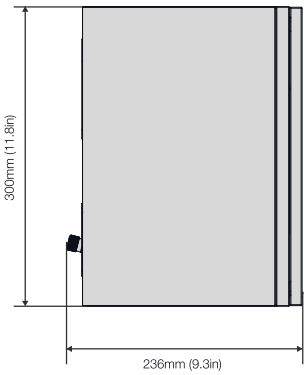

FRONT

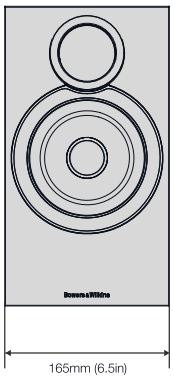

SIDE

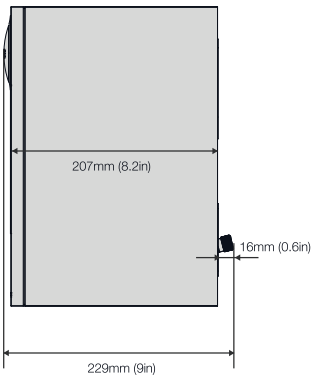

BACK

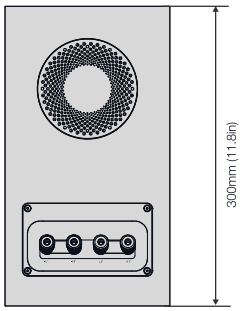

TOP

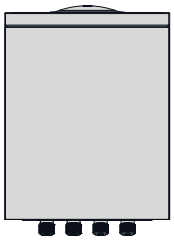
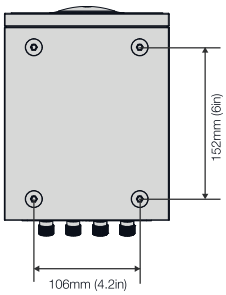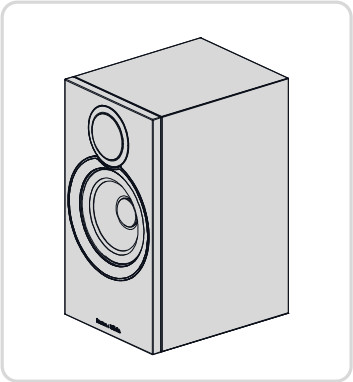
CABINET BASE
STAND SCREW ALIGNMENT